Queen Mary
University of London
Science and Engineering

EBU4202: Digital Circuit Design
Introduction to Lab 2 & 3

Dr. Md Hasanuzzaman Sagor (Hasan)
Dr. Chao Shu (Chao)
Dr. Farha Lakhani (Farha)
Dr. Fatma Benkhelifa

School of Electronic Engineering and Computer Science,
Queen Mary University of London,
London, United Kingdom.

General Requirement

Before attending the lab.

- The lab sheets will be made available before the lab sessions
- Read the lab sheet through
- Complete at least the questions in the ”**Preparatory Work**”.
- We encourage you to complete as many questions in the lab sheet as you can before

Note for the Lab

- If you wait till the lab session to do the preparation, you will not have enough time to complete the lab.
- The completed lab sheets must be handed in at the end of the lab session. Late submissions will not be accepted, resulting in a score of 0!

ICs you will use

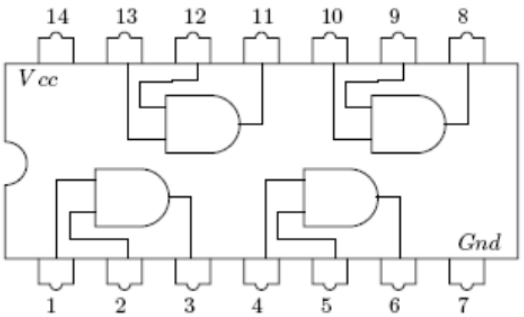

Figure 1 – 7408 (labelled HD74LS08P) quadruple 2-input AND gates.

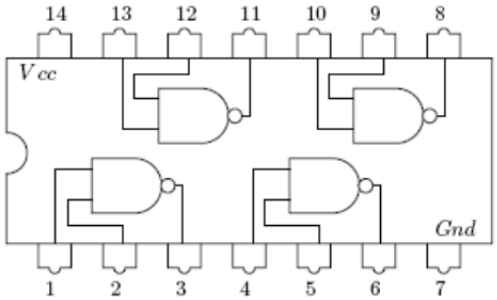

Figure 2 – 7400 (labelled HD74LS00P) quadruple 2-input NAND gates.

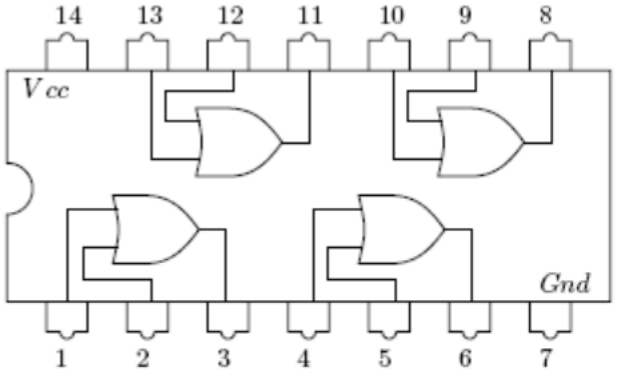

Figure 3 – 7432 (labelled HD74LS32P) quadruple 2-input OR gates.

Experiment 1

Implementation of Half Adder using NAND gate

1)

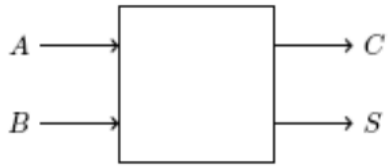

2)

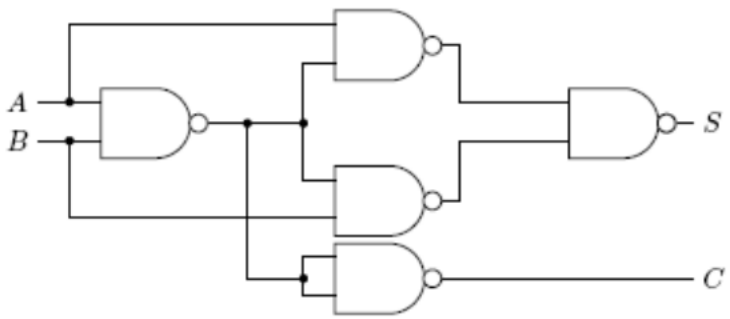

Figure 4 – Half Adder: Block diagram and NAND implementation.

(***) Question 4.1.1 [6 Marks] – Construct the NAND implementation of the Half Adder which is given in *part 2)* of **Figure 4** (using 7400 ICs). By checking its operation against the Truth Table (please include this in your answer), verify that your circuit is functioning correctly as a Half Adder. Your answer should include a fully labelled chip diagram, where all the pin numbers and gate connections are indicated.

Must show your work to TA

Queen Mary
University of London

Experiment 1

Alternate implementation of Half adder

(***) Question 4.1.2 [**7 Marks**] – Design (**Preparatory work**) and build an alternative Half Adder using 7408 and 7432 ICs (i.e., AND and OR gates, respectively), and inverters constructed from 7400 (i.e., NAND) gates. Verify its functionality. Your answer should include a fully labelled chip diagram, where all the pin numbers and gate connections are indicated.

Must show your work to TA

Experiment 2

Implementation Full adder

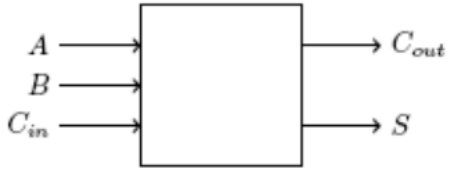

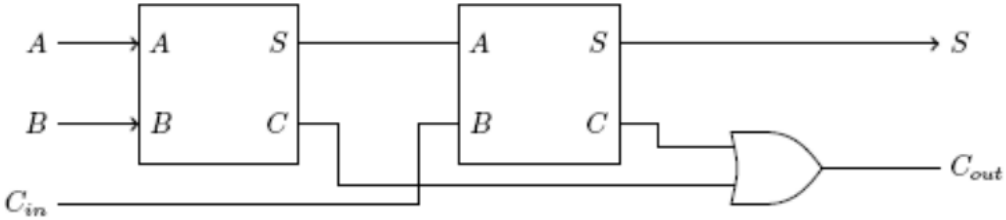

Figure 5 – Full Adder built from 2 Half Adders: Block diagram and Circuit diagram.

(***) Question 4.2.1 [**7 Marks**] – Build a Full Adder from 2 NAND gate Half Adders and check its operation against the Truth Table (please include this in your answer). Your answer should include a fully labelled chip diagram, where all the pin numbers and gate connections are indicated.

HINT: Build and test two separate Half Adders before connecting them together as a Full Adder.

Must show your work to TA

Queen Mary
University of London

Lab 3: Sequential Circuits

Note for the Lab

- Do all the background design work for Experiments 1 and 2, and produce properly numbered circuit diagrams where indicated. You should do all the Preparatory Work before the Lab Session takes place.

- Please note that all the circuits you build during this experiment will require the Test Bench previously described in Lab Sheet 1; you need to assemble this before you start your experiments.

Lab 3: New IC

New chip to be used

- 2 x 7476 (labelled HD74LS76P) Dual JK flip-flops with preset and clear. (For experiment 2 only)

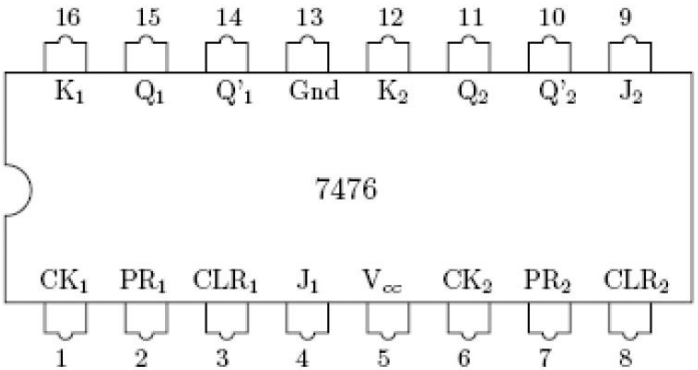

Physical Layout

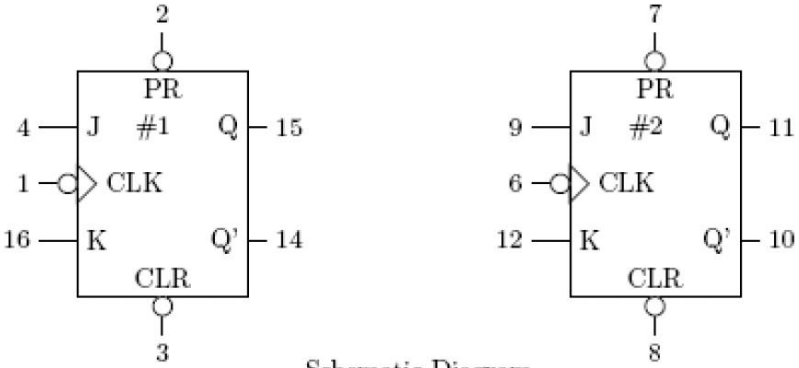

Schematic Diagram

Lab 3: New Instrument

Function Generator / Oscillator with TTL output

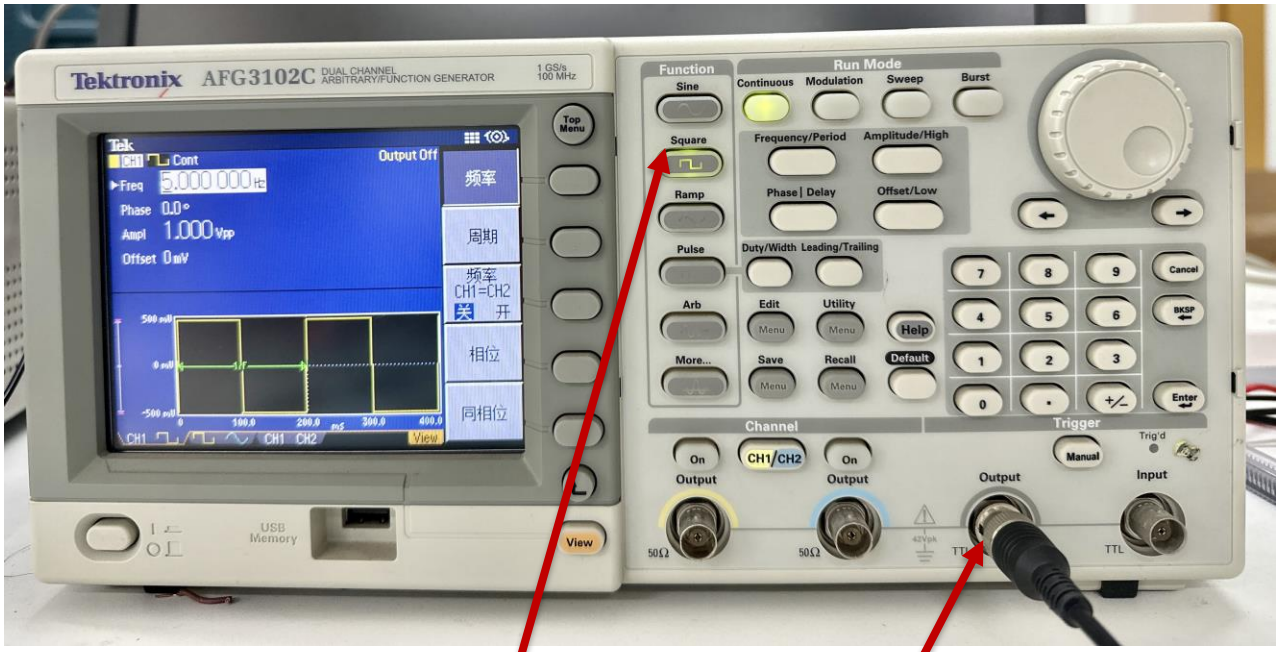

To set the clock frequency. You can set other parameters as well such as amplitude, phase, offset, duty cycle, etc.

Queen Mary University of London

Lab 3: Experiment (SR & D Latches)

Demonstrate this completed task to one of the TAs for verification

Question 4.1.3 [**6 Marks**] – Study, construct and verify the operation of an SR latch (built using two NAND gates – see **Figure 4**), and then describe in your own words how an SR latch works . Your answer must also include a labelled schematic diagram of your SR latch. **Note**: Please make sure you indicate how different pins are connected.

Answer to Question 4.1.3

Providing Q=1 when S' = 1.

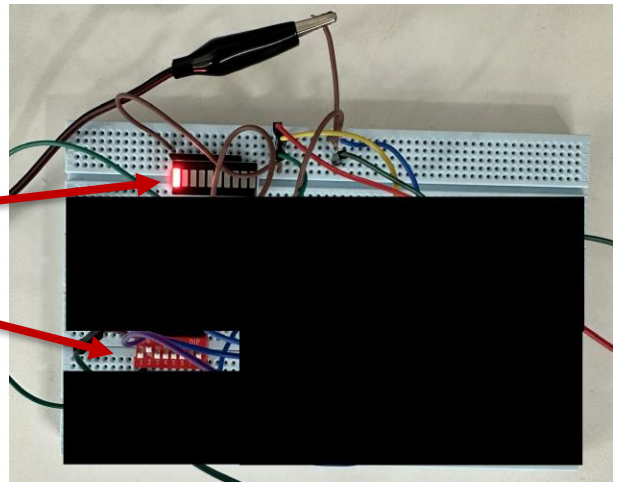

Lab 3: Experiment (SR & D Latches)

Demonstrate this completed task to one of the TAs for verification

Question 4.1.6 [**6 Marks**] – Study, construct and verify the operation of a clocked SR latch (built using four NAND gates – see **Figure 4**), and then describe in your own words how a clocked SR latch works. Your answer must also include a labelled schematic diagram of your clocked SR latch. **Note**: Please make sure you indicate how different pins are connected.

*SR latch design with **4** NAND Gates

Question 4.1.9 [**6 Marks**] – Study, construct and verify the operation of a D latch (built by adding a NOT gate to a clocked SR latch – see **Figure 4** and **Figure 5**), and then describe in your own words how a D latch works. Your answer must also include a labelled schematic diagram of your D latch. **Note**: Please make sure you indicate how different pins are connected.

D latch (built by adding a NOT gate to a clocked SR latch)

Lab 3: Experiment (JK Flip-flop)

Demonstrate this completed task to one of the TAs for verification

Question 4.2.2 [**4 Marks**] – Study, construct and verify the operation of a JK flip-flop (built using a 7476 IC – see **Figure 8**), by writing the Characteristic Table for a JK master-slave flip-flop. **Note**: Please take into account the instructions given at the beginning of this experiment.

Answer to Question 4.2.2

Verify the operation of a JK flip-flop writing the Characteristic Table